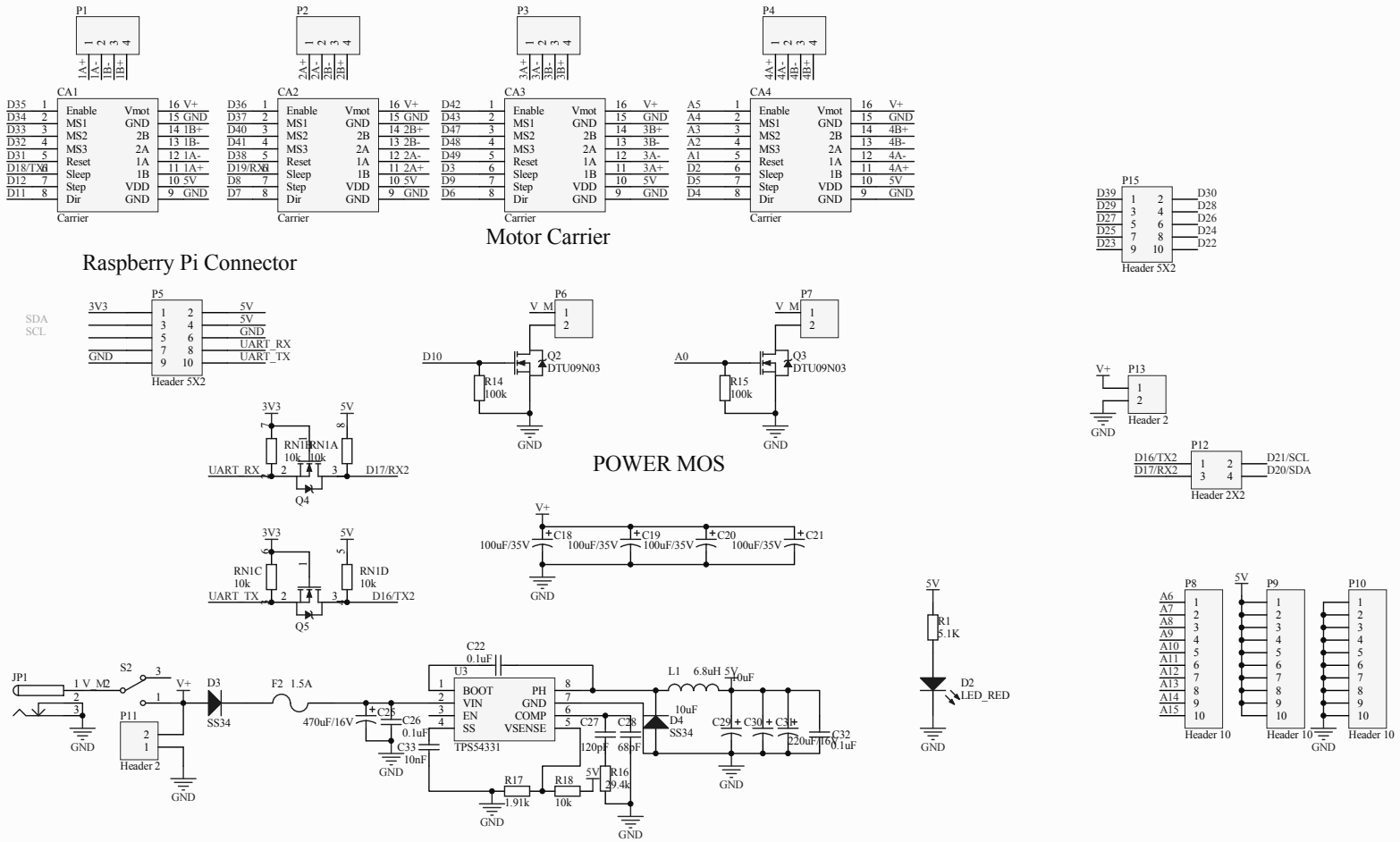
Motor Carrier
Raspberry Pi Connector
POWER MOS
P1
P2
P3
P4
CA1
CA2
CA3
CA4
Carrier
Enable
MS1
MS2
MS3
Reset
Sleep
Step
Dir
Vmot
GND
2B
2A
1B
1A
VDD
V+
1B+
1A-
1B-
1A+
5V
2B+
2B-
2A-
2A+
3B+
3B-
3A-
3A+
4B+
4B-
4A-
4A+
P15
Header 5X2
P5
3V3
SDA
SCL
UART_RX
UART_TX
P6
V_M
Q2
DTU09N03
R14
100k
P7
Q3
R15
P13
Header 2
P12
D16/TX2
D17/RX2
D21/SCL
D20/SDA
Header 2X2
RN1B
RN1A
10k
Q4
RN1C
RN1D
Q5
C18
C19
C20
C21
100uF/35V
JP1
S2
P11
D3
SS34
F2 1.5A
470uF/16V
C25
C26
0.1uF
C33
10nF
C22
U3
BOOT
VIN
EN
SS
PH
COMP
VSENSE
TPS54331
L1 6.8uH
10uF
D4
C27
120pF
C28
68pF
C29
C30
C31
220uF/16V
C32
R17
1.91k
R18
R16
29.4k
R1
5.1K
D2
LED_RED
P8
P9
P10
Header 10